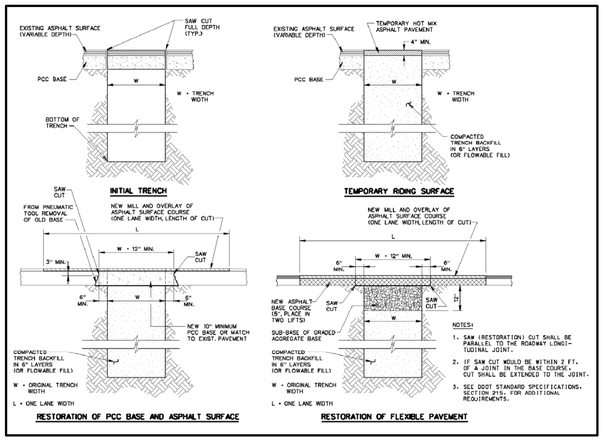

1 C3 PAVEMENT RESTORATION
SECTION — AS SHOWN

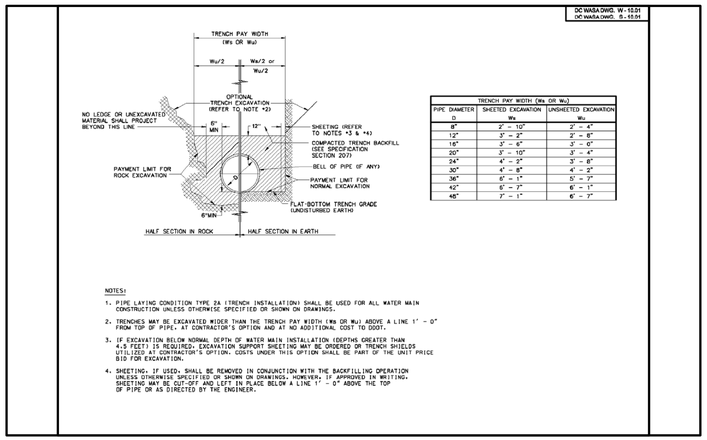

TRENCH PAY WIDTH (Wa OR Wu)		
PIPE DIAMETER D	SHEETED EXCAVATION Wa	UNSHEETED EXCAVATION Wu
8"	2' - 10"	2' - 4"
12"	3' - 2"	2' - 8"
16"	3' - 6"	3' - 0"
20"	3' - 10"	3' - 4"
24"	4' - 2"	3' - 8"
30"	4' - 8"	4' - 2"
36"	5' - 1"	5' - 7"
42"	6' - 7"	6' - 1"
48"	7' - 1"	6' - 7"

2 C3 DUCTILE IRON WATER/SEWER MAIN
SPECIFICATION — AS SHOWN

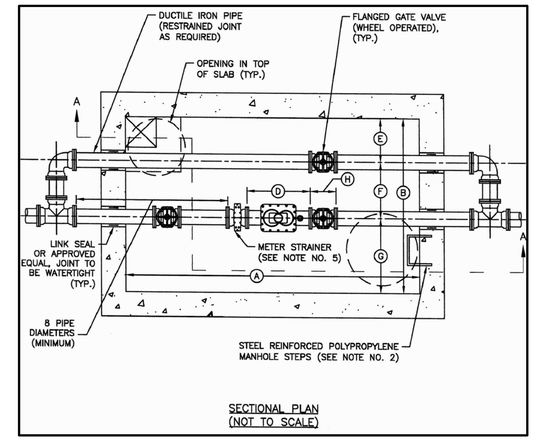

3 C3 COMPOUND/TURBINE WATER METER
SPECIFICATION — N.T.S.

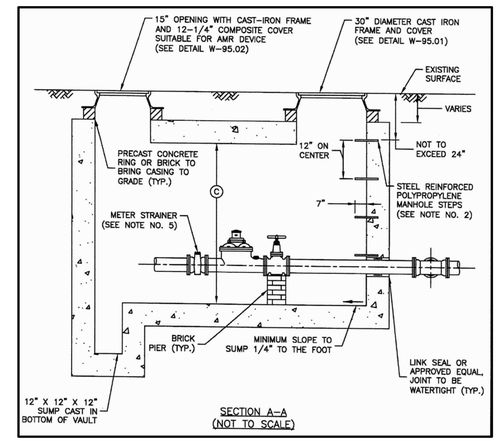

4 C3 COMPOUND/TURBINE WATER METER
SPECIFICATION — N.T.S.

COMPOUND METER								
SIZE	A	B	C	D	E	F	G	H
3"	72"	72"	72"	17"	18"	30"	24"	8"
4"	72"	72"	72"	20"	18"	30"	24"	9"
6"	84"	72"	72"	24"	18"	30"	24"	10.5"
8"	84"	72"	72"	24"	18"	30"	24"	10.5"
DISC METER								
2.5"	72"	60"	72"	20"	11"	24"	25"	7.5"

NOTES:

1. SEALED STRUCTURAL COMPUTATIONS AND REINFORCING DETAILS SHALL BE SUBMITTED FOR APPROVAL PRIOR TO FABRICATIONS.
2. MANHOLE STEPS TO BE M.A. INDUSTRIES MODEL PS3-PFC OR APPROVED EQUAL. CAST INSERTS IN WALL 12" ON CENTER.
3. CONCRETE TO BE CLASS 4000, TYPE II CEMENT.
4. DUCTILE IRON PIPE JOINTS WITHIN VAULT SHALL BE FLANGED.
5. COMPOUND METERS REQUIRE THE INSTALLATION OF METER STRAINERS. HOWEVER, TURBINE METERS DO NOT REQUIRE THE INSTALLATION OF METER STRAINERS. METER STRAINERS SHALL BE INSTALLED BETWEEN THE METER AND SHUTOFF VALVE ON THE STREET SIDE OF THE METER AND HAVE 8 PIPE LENGTHS (MINIMUM) BETWEEN THE METER STRAINER AND NEAREST FITTING.
6. THIS DRAWING SUPERCEDES DRAWING G-808 DATED 2-01-1992.

5 C3 COMPUND/TURBINE WATER METER
SPECIFICATION — N.T.S.

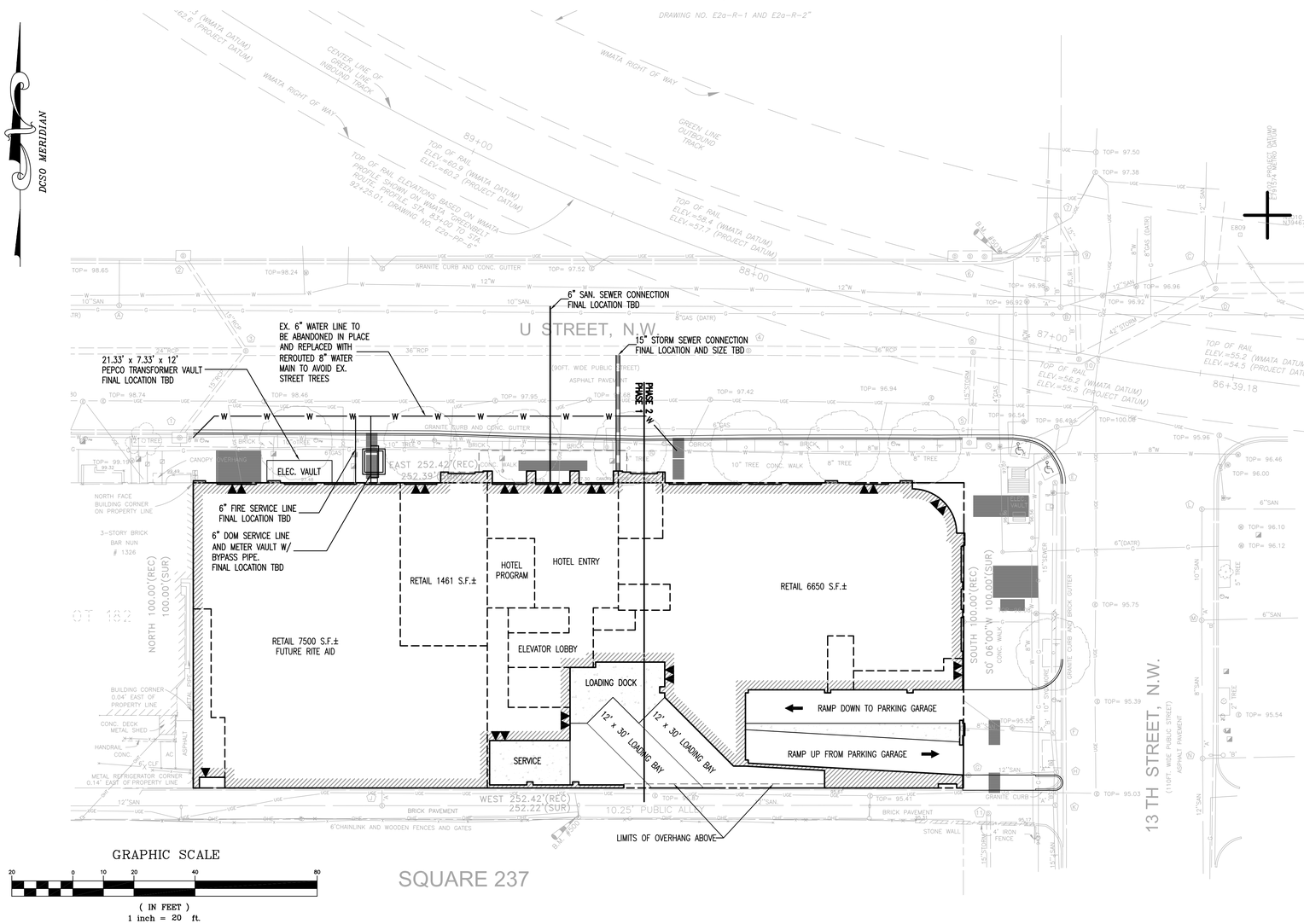

Bowman CONSULTING

Bowman Consulting Group, Ltd.
1395 Piccard Drive
Suite 240
Rockville, Maryland 20850
Phone: (301) 519-8899
Fax: (301) 519-1910
www.bowmanconsulting.com
© Bowman Consulting Group, Ltd.

SUBSURFACE PUBLIC SPACE PLANS
1310 U STREET NW
PDRM SUBMISSION
WARD 2
WASHINGTON D.C.

PLAN STATUS

DATE	DESCRIPTION

KJC	KJC	RAN
DESIGN	DRAWN	CHKD

SCALE H: 1"=20' V: N/A
JOB No. 6284-01-001
DATE : OCTOBER, 2008
FILE No. 6284-D-MP-002
SHEET C3